REV.	DESCRIPTION	DATE
1	PRELIMINARY	Aug.20,2018

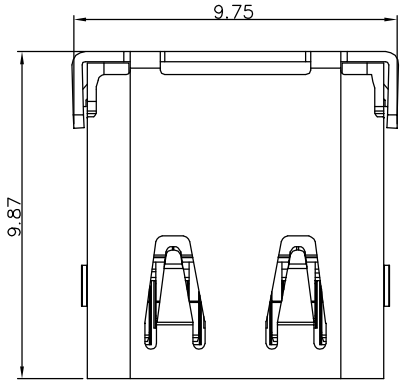

PIN	SIGNAL NAME	PIN	SIGNAL NAME
A1	GND	B12	GND
A2	SSTXP1	B11	SSRXP1
A3	SSTXN1	B10	SSRXN1
A4	VBUS	B9	VBUS
A5	CC1	B8	SBU2
A6	DP1	B7	DN2
A7	DN1	B6	DP2
A8	SBU1	B5	CC2
A9	VBUS	B4	VBUS
A10	SSRXN2	B3	SSTXN2
A11	SSRXP2	B2	SSTXP2
A12	GND	B1	GND

MATERIALS

1. HOUSING : HIGH TEMPERATURE PLASTIC, BLACK.
2. TERMINAL : COPPER ALLOY.
   GOLD PLATING ON CONTACT AREA
   UNDER NICKEL PLATING OVER ALL.
3. SHIELDING PLATE: STAINLESS STEEL,NI PLATED.
4. SPRING: STAINLESS STEEL.
5. SHELL: STAINLESS STEEL,NI PLATED.

SPECIFICATION

1. CURRENT RATING : 3.0A MAX.
2. DIELECTRIC WITHSTANDING VOLTAGE :
   100V AC R.M.S. FOR ONE MINUTE.
3. CONTACT RESISTANCE : 40mΩ MAX.
4. INSULATION RESISTANCE : 100MΩ MIN.
5. OPERATING TEMPERATURE : −30°C ~85°C.
6. DURABILITY : 10000 CYCLES.
7. MATING FORCE : 5N~20N.
8. UNMATING FORCE : 8N~20N.

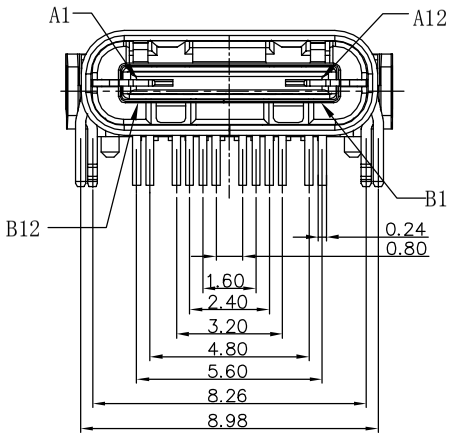

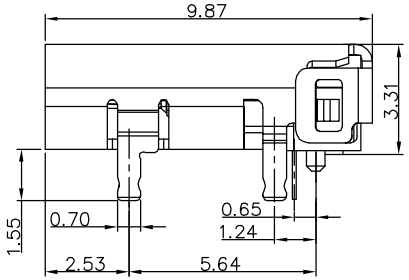

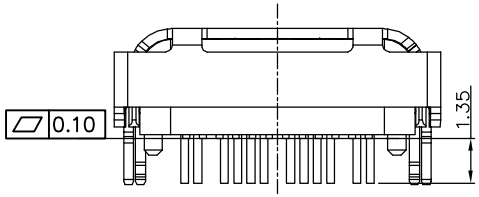

PART NUMBER INFORMATION :

239F324-XN026D-X

- SERIES CODE
- SMT
- FEMALE
- USB C TYPE
- NUMBER OF POSITIONS
- CONTACT PLATING OPTION:
  - 0 : GOLD FLASH
  - 3 : 15u" GOLD
  - 6 : 30u" GOLD
- FOLLOW NUMBER
- R:RoHS
  H:HALOGEN FREE

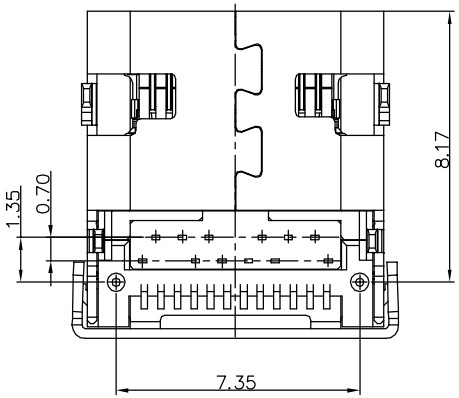

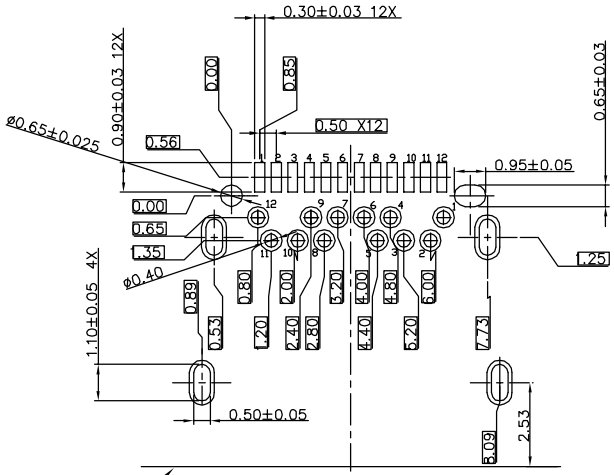

RECOMMENDED P.C.B. LAYOUT (T:1.00mm)
TOLERANCE UNSPECIFIED ±0.05mm

TOLERANCE .0=±0.30 .00=±0.20 .000=±0.10 ANG.=±3°	DRAWER DENG HAN MOU	Astron ASTRON TECHNOLOGY CORP.	
	CHECK SIGURDFU		
	APP'D SIGURDFU	NAME USB C TYPE DIP+SMT FEMALE	
UNITS : mm	PRODUCT SPEC. —		
SCALE NONE / SIZE A4	SHEET 1 OF 1 / REV. 1	DRAW NO. 239F324−XN026D−X	

DRAWING NAME:R