REV.	DESCRIPTION	DATE
1	PRELIMINARY	Sep.14,2018

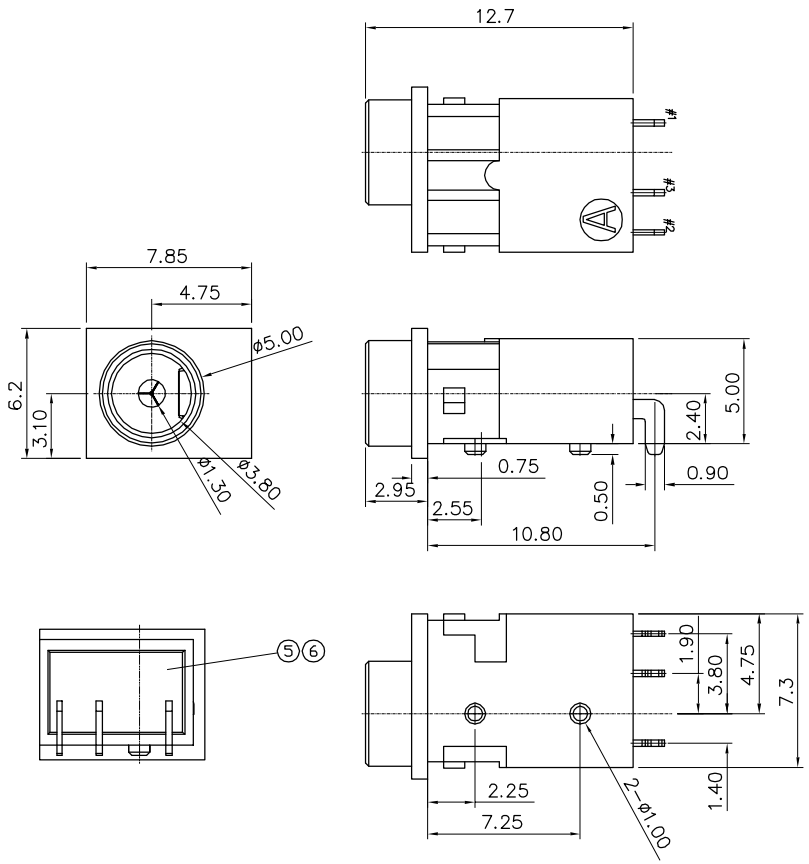

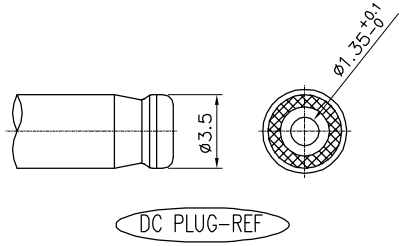

PIN	SCHEMATIC
ø1.3	#1 #3 #2

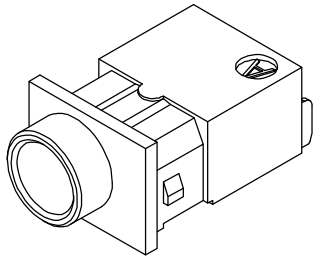

MATERIALS

1. HOUSING: PA10T,BLACK.
2. GLUE: SILICON, BLACK.
3. COVER: PA10T, BLACK.
4. TERMINAL: COPPER ALLOY,
   GOLD FLASH PLATED ON CONTACT AREA,
   UNDER NICKEL PLATED.

SPECIFICATION

1. CURRENT RATING: DC 24V 2A.
2. DIELECTRIC WITHSTANDING VOLTAGE :
   500V AC R.M.S. FOR ONE MINUTE.
3. INSULATION RESISTANCE: 100MΩ MIN.
   AT 500V DC.
4. CONTACT RESISTANCE : 50mΩ MAX(INITIAL).
   100mΩ MAX(FINAL), AFTER TEST:≤50mΩ
5. OPERATING TEMPERATURE : −25°C TO +70°C.
6. DURABILITY : 5000 CYCLES.
7. MATING FORCE : 0.3~3.0kgf(INITIAL).
   0.2~2.0kgf(FINAL)LIFE TEST
8. UNMATING FORCE : 0.3~3.0kgf(INITIAL).
   0.2~2.0kgf(FINAL)LIFE TEST
9. RESISTANCE TO SOLDERING HEAT: 255°C+/−5°C.

PART NUMBER INFORMATION :

726F543-X0001D-X

- SERIES CODE
- DIP 90°
- FEMALE
- ø3.8
- ø1.3
- NUMBER OF POSITIONS
- PLATING SEE TABLE
- R: RoHS
- H: HALOGEN FREE

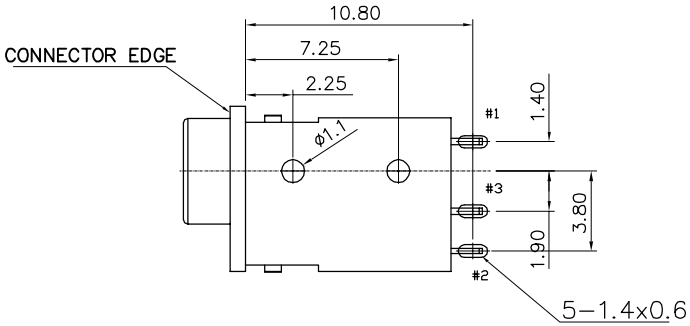

RECOMMENDED P.C.B LAYOUT
TOLERANCE : ±0.05(TOP VIEW)

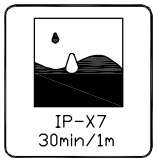

DESCRIPTION OF PLATING ON TERMINALS			
NO.	EXPLAIN	NO.	EXPLAIN
0	GOLD FLASH	3	GOLD 15u"
6	GOLD 30u"		

TOLERANCE .0=±0.30 .00=±0.25 .000=±0.20 ANG.=±3°	DRAWER DENG HAN MOU CHECK SIGURD FU APP'D SIGURD FU	Astron ASTRON TECHNOLOGY CORP.
UNITS : mm	PRODUCT SPEC. —	NAME WATERPROOF DC POWER JACK
SCALE NONE / SIZE A4	SHEET 1 OF 1 / REV. 1	DRAW NO. 726F543-X0001D-X

DRAWING NAME: R